3' X 2'

MARK	SIZE	NO (1)	LGTH FT	LGTH IN	K FT	K IN
A1	5	2	4	5		
A2	5	2	5	11		
C1	4	1	5	11		
C2	4	1	8	4		
E1	5	2	8	3	5	3
E2	5	2	8	8	5	8
F	4	6	1	3	0	6
G1	4	2	6	3		
G2	4	2	8	0		
H	4	5	6	0	4	4
K1	4	1	1	11		
K2	4	1	3	8		
N1	4	3	3	10		
N2	4	3	8	8		
Q	4	2	3	4		
R	4	4	0	11		
S1	5	2	1	1		
S2	5	2	1	10		
S3	5	2	2	6		
S4	5	2	3	0		
T1	5	2	1	9		
T2	5	2	3	2		
T3	5	2	4	1		
V1	5	2	2	9	1	6
V2	5	2	3	7	2	4
V3	5	2	4	5	3	2
V4	5	3	4	7	3	4
W1	5	2	2	10	1	7
W2	5	2	4	0	2	9

3' X 3'

MARK	SIZE	NO (1)	LGTH FT	LGTH IN	K FT	K IN
A1	5	2	5	7		
A2	5	2	7	5		
C1	4	1	6	1		
C2	4	1	8	10		
C3	4	1	10	1		
E1	5	2	8	3	5	3
E2	5	2	8	8	5	8
F	4	6	1	3	0	6
G1	4	1	5	10		
G2	4	2	7	10		
G3	4	3	9	10		
H	4	6	7	0	5	4
K1	4	1	2	0		
K2	4	1	3	9		
K3	4	1	4	10		
N1	4	3	4	10		

3' X 3' (CONTINUED)

MARK	SIZE	NO (1)	LGTH FT	LGTH IN	K FT	K IN
N2	4	3	10	1		
Q	4	2	3	4		
R	4	4	0	11		
S1	5	2	1	1		
S2	5	2	1	10		
S3	5	2	2	6		
S4	5	2	3	0		
T1	5	2	1	9		
T2	5	2	3	2		
T3	5	2	4	1		
V1	5	2	3	3	2	0
V2	5	2	4	1	2	10
V3	5	2	4	10	3	7
V4	5	4	5	7	4	4
W1	5	2	3	4	2	1
W2	5	2	4	6	3	3
W3	5	1	5	7	4	4

4' X 2'

MARK	SIZE	NO (1)	LGTH FT	LGTH IN	K FT	K IN
A1	5	2	4	8		
A2	5	2	6	3		
C1	4	1	7	0		
C2	4	1	9	6		
E1	5	2	9	10	6	10
E2	5	2	10	4	7	4
F	4	7	1	3	0	6
G1	4	2	8	2		
G2	4	3	10	0		
H	4	6	6	2	4	6
K1	4	1	2	1		
K2	4	1	3	9		
N1	4	3	4	0		
N2	4	3	9	9		
Q	4	2	4	6		
R	4	5	1	0		
S1	5	2	1	2		
S2	5	2	1	11		
S3	5	2	2	8		
S4	5	2	3	4		
S5	5	2	3	10		
T1	5	2	1	6		
T2	5	2	2	11		
T3	5	2	4	4		
T4	5	2	5	3		
V1	5	2	2	9	1	6
V2	5	2	3	7	2	4
V3	5	2	4	5	3	2
V4	5	4	4	8	3	5

4' X 2' (CONTINUED)

MARK	SIZE	NO (1)	LGTH FT	LGTH IN	K FT	K IN
W1	5	2	2	10	1	7
W2	5	2	4	0	2	9

4' X 3'

MARK	SIZE	NO (1)	LGTH FT	LGTH IN	K FT	K IN
A1	5	2	5	9		
A2	5	2	7	9		
C1	4	1	7	1		
C2	4	1	9	7		
C3	4	1	11	2		
E1	5	2	9	10	6	10
E2	5	2	10	4	7	4
F	4	7	1	3	0	6
G1	4	1	6	7		
G2	4	2	8	4		
G3	4	3	10	0		
H	4	6	7	2	5	6
K1	4	1	2	2		
K2	4	1	4	0		
K3	4	1	5	0		
N1	4	3	5	0		
N2	4	3	11	2		
Q	4	2	4	6		
R	4	5	1	0		
S1	5	2	1	2		
S2	5	2	1	11		
S3	5	2	2	8		
S4	5	2	3	4		
S5	5	2	3	10		
T1	5	2	1	6		
T2	5	2	2	11		
T3	5	2	4	4		
T4	5	2	5	3		
V1	5	2	3	3	2	0
V2	5	2	4	1	2	10
V3	5	2	4	10	3	7
V4	5	5	5	8	4	5
W1	5	2	3	4	2	1
W2	5	2	4	5	3	2
W3	5	1	5	7	4	4

4' X 4'

MARK	SIZE	NO (1)	LGTH FT	LGTH IN	K FT	K IN
A1	5	2	6	10		
A2	5	2	9	2		
C1	4	1	7	2		
C2	4	1	9	9		
C3	4	1	12	3		
C4	4	1	12	7		
E1	5	2	9	10	6	10
E2	5	2	10	4	7	4
F	4	7	1	3	0	6
G1	4	2	8	3		
G2	4	2	10	1		
G3	4	3	12	0		
H	4	7	8	2	6	6
K1	4	1	2	3		
K2	4	1	4	1		
K3	4	1	5	10		
K4	4	1	6	0		
N1	4	3	6	0		
N2	4	3	12	7		
Q	4	2	4	6		
R	4	5	1	0		
S1	5	2	1	2		
S2	5	2	1	11		
S3	5	2	2	8		
S4	5	2	3	4		
S5	5	2	3	10		
T1	5	2	1	6		
T2	5	2	2	11		
T3	5	2	4	4		
T4	5	2	5	3		
V1	5	2	3	9	2	6
V2	5	2	4	6	3	3
V3	5	2	5	4	4	1
V4	5	2	6	1	4	10
V5	5	5	6	8	5	5
W1	5	2	3	10	2	7
W2	5	2	4	11	3	8
W3	5	2	6	1	4	10

5' X 3'

MARK	SIZE	NO (1)	LGTH FT	LGTH IN	K FT	K IN
A1	5	2	5	11		
A2	5	2	7	11		
C1	4	1	5	8		
C2	4	1	8	2		
C3	4	1	10	8		
C4	4	1	12	2		
E1	5	2	11	6	8	6

5' X 3' (CONTINUED)

MARK	SIZE	NO (1)	LGTH FT	LGTH IN	K FT	K IN
E2	5	2	11	11	8	11
F	4	9	1	3	0	6
G1	4	2	8	6		
G2	4	2	10	2		
G3	4	3	12	0		
H	4	7	7	4	5	8
K1	4	1	2	4		
K2	4	1	4	1		
K3	4	1	5	2		
N1	4	3	5	2		
N2	4	3	12	3		
Q	4	2	5	8		
R	4	6	1	1		
S1	5	2	1	4		
S2	5	2	2	1		
S3	5	2	2	9		
S4	5	2	3	6		
S5	5	2	4	2		
S6	5	2	4	8		
T1	5	2	1	3		
T2	5	2	2	8		
T3	5	2	4	1		
T4	5	2	5	6		
T5	5	2	6	5		
V1	5	2	3	3	2	0
V2	5	2	4	0	2	9
V3	5	2	4	10	3	7
V4	5	2	5	7	4	4
V5	5	4	5	9	4	6
W1	5	2	3	4	2	1
W2	5	2	4	5	3	2
W3	5	1	5	6	4	3

5' X 4'

MARK	SIZE	NO (1)	LGTH FT	LGTH IN	K FT	K IN
A1	5	2	7	1		
A2	5	2	9	5		
C1	4	1	5	8		
C2	4	1	8	2		
C3	4	1	10	9		
C4	4	1	13	3		
C5	4	1	13	7		
E1	5	2	11	6	8	6
E2	5	2	11	11	8	11
F	4	9	1	3	0	6
G1	4	1	8	2		
G2	4	2	10	1		
G3	4	2	12	1		
G4	4	3	14	0		

5' X 4' (CONTINUED)

MARK	SIZE	NO (1)	LGTH FT	LGTH IN	K FT	K IN
H	4	8	8	4	6	8
K1	4	1	2	4		
K2	4	1	4	2		
K3	4	1	6	0		
K4	4	1	6	2		
N1	4	3	6	2		
N2	4	3	13	7		
Q	4	2	5	8		
R	4	6	1	1		
S1	5	2	1	4		
S2	5	2	2	1		
S3	5	2	2	9		
S4	5	2	3	6		
S5	5	2	4	2		
S6	5	2	4	8		
T1	5	2	1	3		
T2	5	2	2	8		
T3	5	2	4	1		
T4	5	2	5	6		
T5	5	2	6	5		
V1	5	2	3	9	2	6
V2	5	2	4	6	3	3
V3	5	2	5	4	4	1
V4	5	2	6	1	4	10
V5	5	6	6	9	5	6
W1	5	2	3	10	2	7
W2	5	2	4	11	3	8
W3	5	2	6	0	4	9

NOTES

1. NUMBER OF BARS IN ONE HEADWALL.
2. DIMENSIONS ARE 0. TO 0. OF BARS.
3. ALL BARS ARE STRAIGHT EXCEPT THOSE SHOWN BELOW.
4. R = BOX OR PIPE RISE
5. W = WING WALL WIDTH

BENT BAR SHAPES

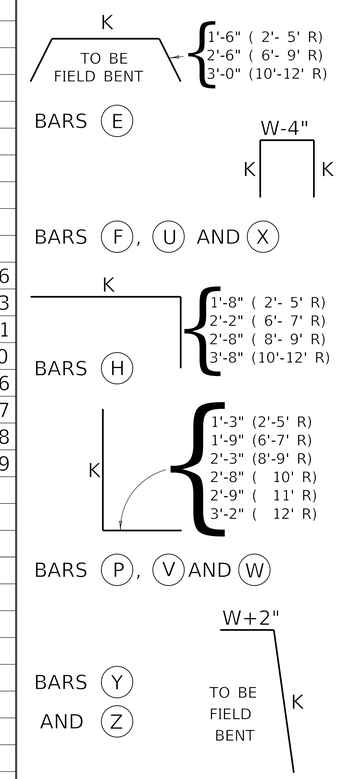

KENTUCKY
DEPARTMENT OF HIGHWAYS

BILL OF REINFORCEMENT
3' X 2' - 5' X 4' HEADWALLS
PRECAST BOX CULVERTS
30° SKEW

STANDARD DRAWING NO. RDH-1328-03

SUBMITTED _____ DIRECTOR DIVISION OF DESIGN _____ DATE

APPROVED _____ STATE HIGHWAY ENGINEER _____ DATE